Designed by ZWCAD Academic Version

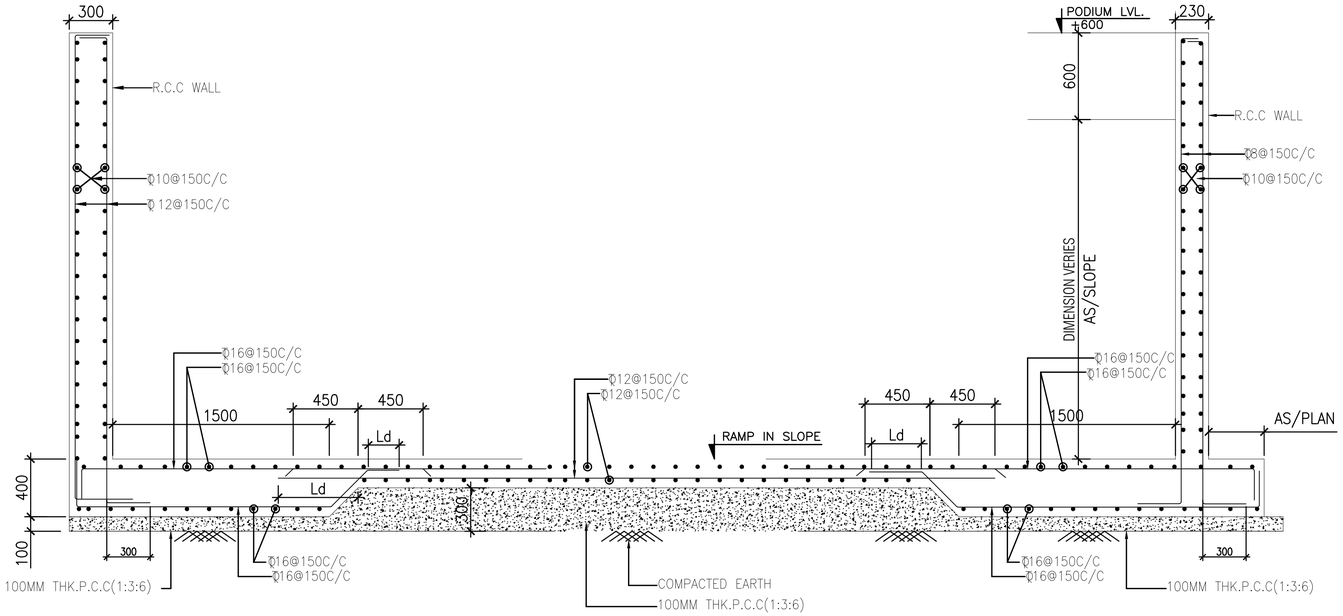

SECTION: X–X

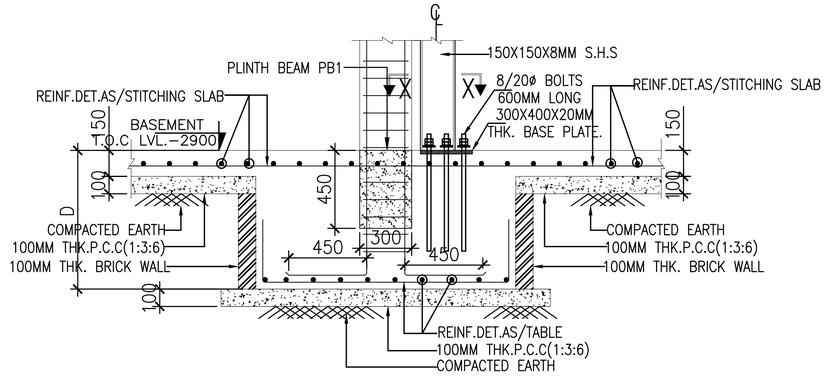

TYP. COLUMN FOOTING DETAIL
SECTION: M–M

NOTES

1. ALL DIMENSIONS ARE IN MM.
2. ALL P.C.C. WORK SHALL BE IN 1:3:6 U.N.O.
3. ALL R.C.C. WORK SHALL BE IN MIX M30 EXCEPT COLUMN GRADE M–35.
4. CLEAR COVER TO MAIN REINF. SHALL BE:–
   a) FOUNDATION = 50mm
   b) BEAM = 30mm
   c) COLUMN = 40mm
   d) SLAB = 25mm
5. GRADE OF STEEL Fe–550D
6. Ld=DEVELOPMENT LENGTH 50 X DIA
7. THIS DRG. TO BE READ IN CONJUNCTION WITH RELEVANT ARCHITECTURAL DRG.
8. FOUNDATIONS ARE DESIGNED FOR NET SBC OF 17.76 & 27.54 T/SQ.M
9. BUILDING HAS BEEN DESIGNED FOR B+G+3

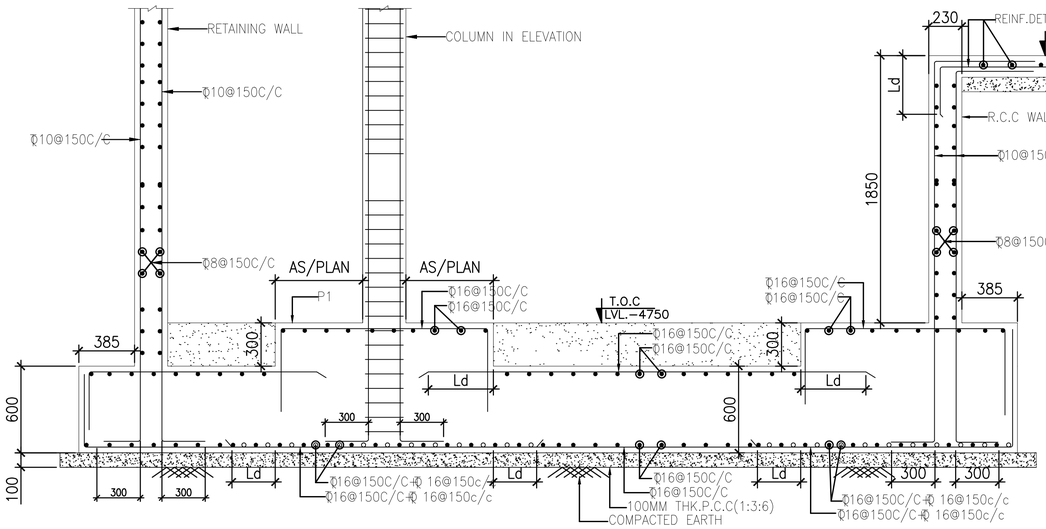

SECTION: J–J

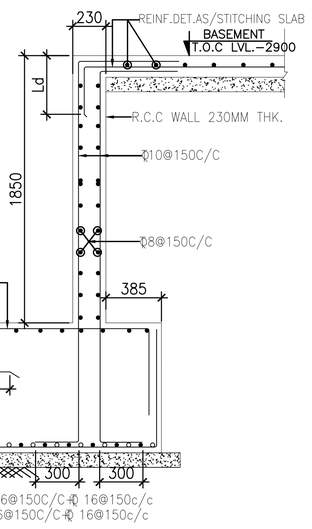

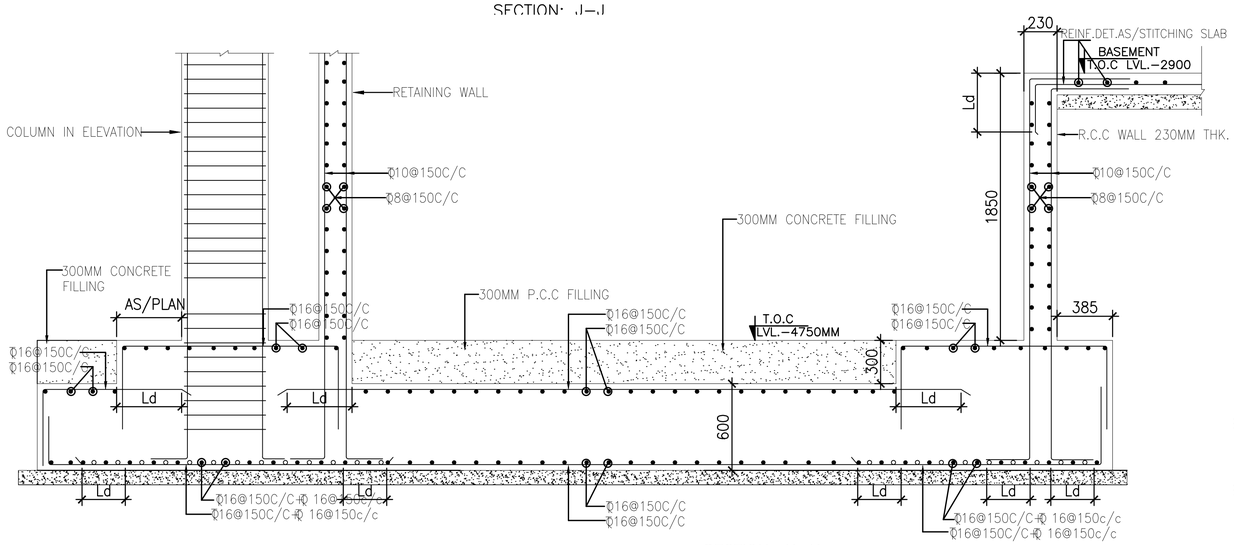

SECTION: K–K

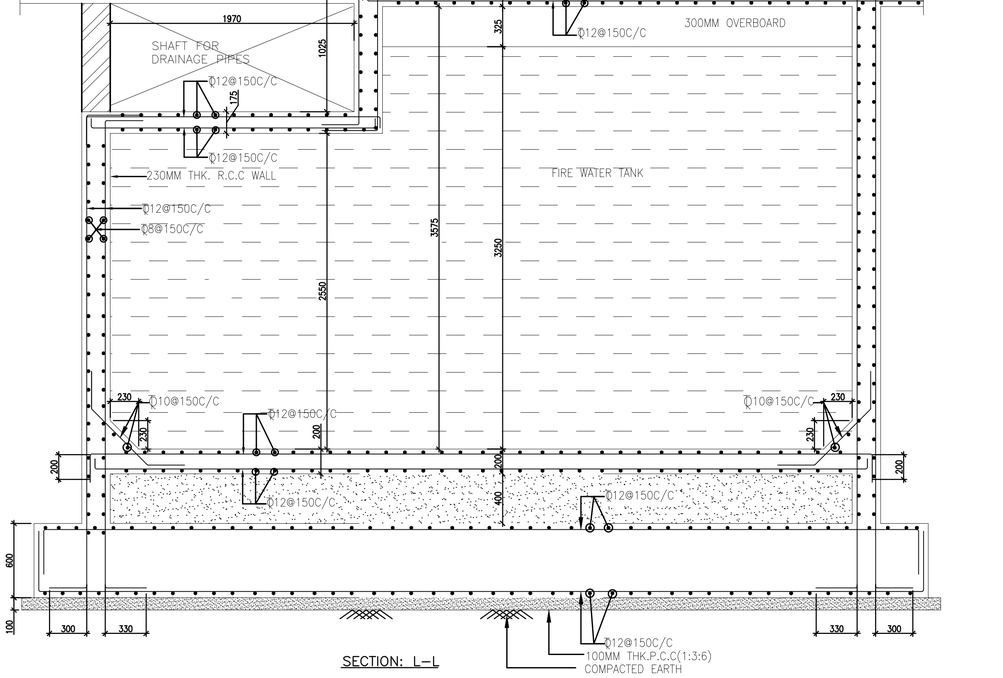

SECTION: L–L

LEGENDS :

REVISION NOTES :

No.	DATE	DESCRIPTION
R1		
R2		

PROJECT:

SOUTH AFRICA HIGH COMMISION

PROJECT OWNER/ DEVELOPER:

INTERNATIONAL RELATIONS & COOPERATION,
REPUBLIC OF SOUTH AFRICA

ARCHITECT:

Spaces Architecture Studio
V-12/23 DLF-3, Gurugram.
Ph.: 0124-4734320
e-mail: contact@studiosas.in
https://www.studiosas.in

STRUCTURAL CONSULTANT:

JAITLY ASSOCIATES
E–60, 2ND FLOOR MASJID MOTH
GREATER KAILASH–III
NEW DELHI–110048
PHONE NO–011–40569877
E–mail: njaitly49@gmail.com

SCALE:–	N.T.S
DRAWN BY:–	INDRAMOHAN
DESIGN BY:–	ASIF
APPROVED BY:–	N.JAITLY
DATE:–	30–07–2025

PURPOSE OF DWG:

- ☐ APPROVAL
- ☐ CONSTRUCTION
- ■ TENDER
- ☐ ADVANCE COPY

DRAWING TITLE:

Foundation Details
(Sheet No 4 of 5)

DISCIPLINE :

DRAWING NO: JA-STR-SAA-(CH)ST-04D

REV: N

Designed by ZWCAD Academic Version
Designed by ZWCAD Academic Version
Designed by ZWCAD Academic Version